Date: Friday, 8/25/2006 11:20:45 AM
User: Kim Johnston

Process Sheet

Customer	: CU-DAR001 Dart Helicopters Services	**Drawing Name**	: BEARPAW KIT (19"X24")
Job Number	: 28340		
Estimate Number	: 10323		
P.O. Number	: N/A	**Part Number**	: K10008
This Issue	: 8/25/2006 **S.O. No.** : N/A	**Drawing Number**	: D2432 REV F3
Prsht Rev.	: NC	**Project Number**	: N/A
First Issue	: N/A **Type** : MACHINED PARTS	**Drawing Revision**	: F3
Previous Run	: 27871	**Material**	: N/A
Written By	:	**Due Date**	: 9/25/2006 **Qty:** 20 **Um:** Each
Checked & Approved By	: 06.08.25		
Comment	: Est Rev:J 04.02.17 Blank size changed KJ/JLM		

Additional Product

Job Number:

Seq. #:	Machine Or Operation:	Description :
1.0	DC	DOCUMENT CONTROL

Comment: DOCUMENT CONTROL
Photocopy bluefile:
K10008
D206-559-013
D350-578-011
D427-659-011
D315-670-011
and create labels per PPP K10008
CHG006(Bag Bluefiles separately)

See ATTACHED.

2.0	MUHMWB10	UHMW 1" Black

Comment: Qty.: 6.8250 sf(s)/Unit Total : 136.5000 sf(s)
blank: 19.500" x 24.00" x 1.00" thick (+0.030/-0.000) per DSK086-5
Material: Black UHMW 1" 101254 M100627 / 1 Pcs
(MUHMWB10)
Batch: M[illegible]/39 pcs J.F. 06/09/03 20

3.0	HAAS1	HAAS CNC VERTICAL MACHINING #1

Comment: HAAS CNC VERTICAL MACHINING #1
Note:(2) bearpaws for (1) Kit

1-Inspect material for defects or damage prior to machining

2-Machine as per Folio and Dwg D2432 Identify as D2432F

3-Deburr J.F. 06/09/11 20

Form: rprocess

Dart Aerospace Ltd

W/O:		WORK ORDER CHANGES					
DATE	STEP	PROCEDURE CHANGE	By	Date	Qty	Approval Mfg / Design Mgr	Approval QC Inspector

NCR:		WORK ORDER NON-CONFORMANCE (NCR)						
DATE	STEP	Description of NC Section A	Corrective Action Section B			Verification Section C	Approval Design Mgr	Approval QC Inspector
			Initial Design Mgr	Action Description Design Mgr	Sign & Date			

Part No: _____ **PAR #:** _____ **Fault Category:** _____ **NCR:** Yes No **DQA:** _____ **Date:** _____

NOTE: Date & initial all entries **QA: N/C Closed:** _____ **Date:** _____

H:\forms\Quality Assurance\approved forms\NCRWO revC

Date: Friday, 8/25/2006 11:20:46 AM
User: Kim Johnston

Process Sheet

Customer: CU-DAR001 Dart Helicopters Services
Drawing Name: BEARPAW KIT (19"X24")

Job Number: 28340
Part Number: K10008

Job Number:

Seq. #:	Machine Or Operation:	Description :
4.0	QC2	INSPECT PARTS AS THEY COME OFF MACHINE

Comment: INSPECT PARTS AS THEY COME OFF MACHINE J.F. 06/09/11 20

5.0	QC8	SECOND CHECK

Comment: SECOND CHECK SD 06.09.14 20

6.0	PACKAGING 1	PACKAGING RESOURCE #1

Comment: PACKAGING RESOURCE #1
Pick Packing Kit

7.0	D2182B	Neoprene Cushion-.750 bl

Comment: Qty.: 0.4166 f(s)/Unit Total : 8.3320 f(s)
Pick: Packing Kit

Qty	Part Number	Description	Batch
6	D2182B050	Rubber Cushion	B28042

8.0	D2274	Radius Block

Comment: Qty.: 12.0000 Each(s)/Unit Total : 240.0000 Each(s)
Pick: Packing Kit B28344 23MY

Qty	Part Number	Description	Batch
12	D2274	Radius Block	B27581 217MCP
2	D2432F(ref only)	Bearpaw	B28340

9.0	D2438	Clamp

Comment: Qty.: 6.0000 Each(s)/Unit Total : 120.0000 Each(s)
Pick: Packing Kit

Qty	Part Number	Description	Batch
6	D2438	Clamp	B25611 4MCP
			B27080 116MY

Form: rprocess

Dart Aerospace Ltd

W/O:		WORK ORDER CHANGES					
DATE	STEP	PROCEDURE CHANGE	By	Date	Qty	Approval Mfg / Design Mgr	Approval QC Inspector

NCR:		WORK ORDER NON-CONFORMANCE (NCR)						
DATE	STEP	Description of NC Section A	Corrective Action Section B			Verification Section C	Approval Design Mgr	Approval QC Inspector
			Initial Design Mgr	Action Description Design Mgr	Sign & Date			

Part No: _____ **PAR #:** _____ **Fault Category:** _____ **NCR:** Yes No **DQA:** _____ **Date:** _____

NOTE: Date & initial all entries **QA: N/C Closed:** _____ **Date:** _____

Date: Friday, 8/25/2006 11:20:46 AM
User: Kim Johnston

Process Sheet

Customer: CU-DAR001 Dart Helicopters Services
Drawing Name: BEARPAW KIT (19"X24")

Job Number: 28340
Part Number: K10008

Job Number:

Seq. #:	Machine Or Operation:	Description :
10.0	D2529	Washer

Comment: Qty.: 12.0000 Each(s)/Unit Total : 240.0000 Each(s)
Pick: Packing Kit

Qty	Part Number	Description	Batch
12	D2529	Washer	B27876

11.0	D2732	Rubber Extrusion

Comment: Qty.: 0.4166 f(s)/Unit Total : 8.3320 f(s)
Pick: Packing Kit

Qty	Part Number	Description	Batch
6	D2732-050	Rubber Cushion	B26472

12.0	AN415A	Bolt

Comment: Qty.: 12.0000 Each(s)/Unit Total : 240.0000 Each(s)
Pick: Packing Kit

M122039 206 ea

Qty	Part Number	Description	Batch
12	AN4-15A	Bolt	M19185 34 mcy

13.0	AN417A	Bolt

Comment: Qty.: 12.0000 Each(s)/Unit Total : 240.0000 Each(s)
Pick: Packing Kit

Qty	Part Number	Description	Batch
12	AN4-17A	Bolt	M19471 108 mcy
			M11124 134 mcy

14.0	AN960JD416	Washer

Comment: Qty.: 24.0000 Each(s)/Unit Total : 480.0000 Each(s)
Pick: Packing Kit

Qty	Part Number	Description	Batch
24	AN960JD416	Washer	M19185

Form: rprocess

Dart Aerospace Ltd

W/O:		WORK ORDER CHANGES					
DATE	STEP	PROCEDURE CHANGE	By	Date	Qty	Approval Mfg / Design Mgr	Approval QC Inspector

NCR:		WORK ORDER NON-CONFORMANCE (NCR)						
DATE	STEP	Description of NC Section A	Corrective Action Section B			Verification Section C	Approval Design Mgr	Approval QC Inspector
			Initial Design Mgr	Action Description Design Mgr	Sign & Date			

Part No: _____ PAR #: _____ Fault Category: _____ NCR: Yes (No) DQA: _____ Date: 06/09/26

NOTE: Date & initial all entries

QA: N/C Closed: _____ Date: _____

H:\forms\Quality Assurance\approved forms\NCRWO revC

Date: Friday, 8/25/2006 11:20:46 AM
User: Kim Johnston

Process Sheet

Customer: CU-DAR001 Dart Helicopters Services **Drawing Name:** BEARPAW KIT (19"X24")

Job Number: 28340 **Part Number:** K10008

Job Number:

Seq. #:	Machine Or Operation:	Description :
15.0	MS21042L4	Nut

Comment: Qty.: 12.0000 Each(s)/Unit Total : 240.0000 Each(s)
Pick: Packing Kit

Qty	Part Number	Description	Batch
12	MS21042L4	Nut (or -4)	M 19088

6/9/20 (20)

16.0	QC4	INSPECT 100% KITS FOR COMPLETENESS

06/09/21 (20)

Comment: INSPECT 100% KITS FOR COMPLETENESS 06/09/21 (20)

17.0	PACKAGING 1	PACKAGING RESOURCE #1

Comment: PACKAGING RESOURCE #1
Identify and pack for shipping as per PPPK10008
Location: – 6/9/21 (20)

18.0	DC	DOCUMENT CONTROL

Comment: DOCUMENT CONTROL
Inspection Level 21 06.09.25

Job Completion 06.09.22

Dart Aerospace Ltd

W/O:		WORK ORDER CHANGES					
DATE	STEP	PROCEDURE CHANGE	By	Date	Qty	Approval Mfg / Design Mgr	Approval QC Inspector

NCR:		WORK ORDER NON-CONFORMANCE (NCR)						
DATE	STEP	Description of NC Section A	Corrective Action Section B			Verification Section C	Approval Design Mgr	Approval QC Inspector
			Initial Design Mgr	Action Description Design Mgr	Sign & Date			

Part No: _____ **PAR #:** _____ **Fault Category:** _____ **NCR:** Yes No **DQA:** _____ **Date:** _____

NOTE: Date & initial all entries

QA: N/C Closed: _____ **Date:** _____

H:\forms\Quality Assurance\approved forms\NCRWO revC

DART AEROSPACE LTD	Work Order:	28340
Description: Bearpaw	Part Number:	D2432
Inspection Dwg: D2432 Rev: F3		Page 1 of 1

FIRST ARTICLE INSPECTION CHECKLIST

[X] First Article [ ] Prototype

Inspection Sheet Drawing Dimension		Tolerance	Actual Dimension	Accept	Reject	Method of Inspection	Comments
A	0.063 x 45°	+0.030/-0.010	.060x45°	✓			
B	5.500	+/-0.030	5.499"	✓			
C	0.200	+/-0.030	.198"	✓			
D	0.25 x 45°	+/-0.030	.230x45°	✓			
E	R0.250	+/-0.030	R0.250"	✓			
F	0.250	+/-0.010	.257"	✓			
G	0.625	+/-0.030	.633"	✓			
H	0.375	+/-0.010	.380"	✓			
I	0.950	+0.030/0.010	.957"	✓			
J	19.000	+/-0.030	19.002"	✓			
K	3.14	+/-0.030	3.145"	✓			
L	3.28	+/-0.030	3.310"	✓			
M	Ø0.260	+0.005/-0.000	Ø.260"	✓			
N	Ø0.93	+/-0.030	Ø.929"	✓			
O	0.30	+0.030/-0.000	.315"	✓			
P	23.750	+/-0.030	23.750"	✓			
Q	7.375	+/-0.030	7.378"	✓			
R	4.250	+/-0.010	4.253	✓			
S	2.000	+/-0.030	1.997	✓			
T	9.000	+/-0.010	9.000"	✓			
U	9.000	+/-0.010	9.000"	✓			
V	0.375	+/-0.010	.380"	✓			

Measured by:	J.F.
Date:	06/09/03

Audited by:	SD
Date:	06.09.04

Prototype Approval:	N/A
Date:	N/A

Rev	Date	Change		Revised by	Approved
A	04.01.09	New Issue	P/O K10008/D206-559-015	KJ/RF	

F1	99.03.03	ADD DEO 9143
F2	01.03.28	⌀0.93 WAS ⌀0.75 RF
F3	02.01.23	CLARIFY BORE DIMS RF

RELEASED 98.06.17 KE

DART

COPY REQUIRED

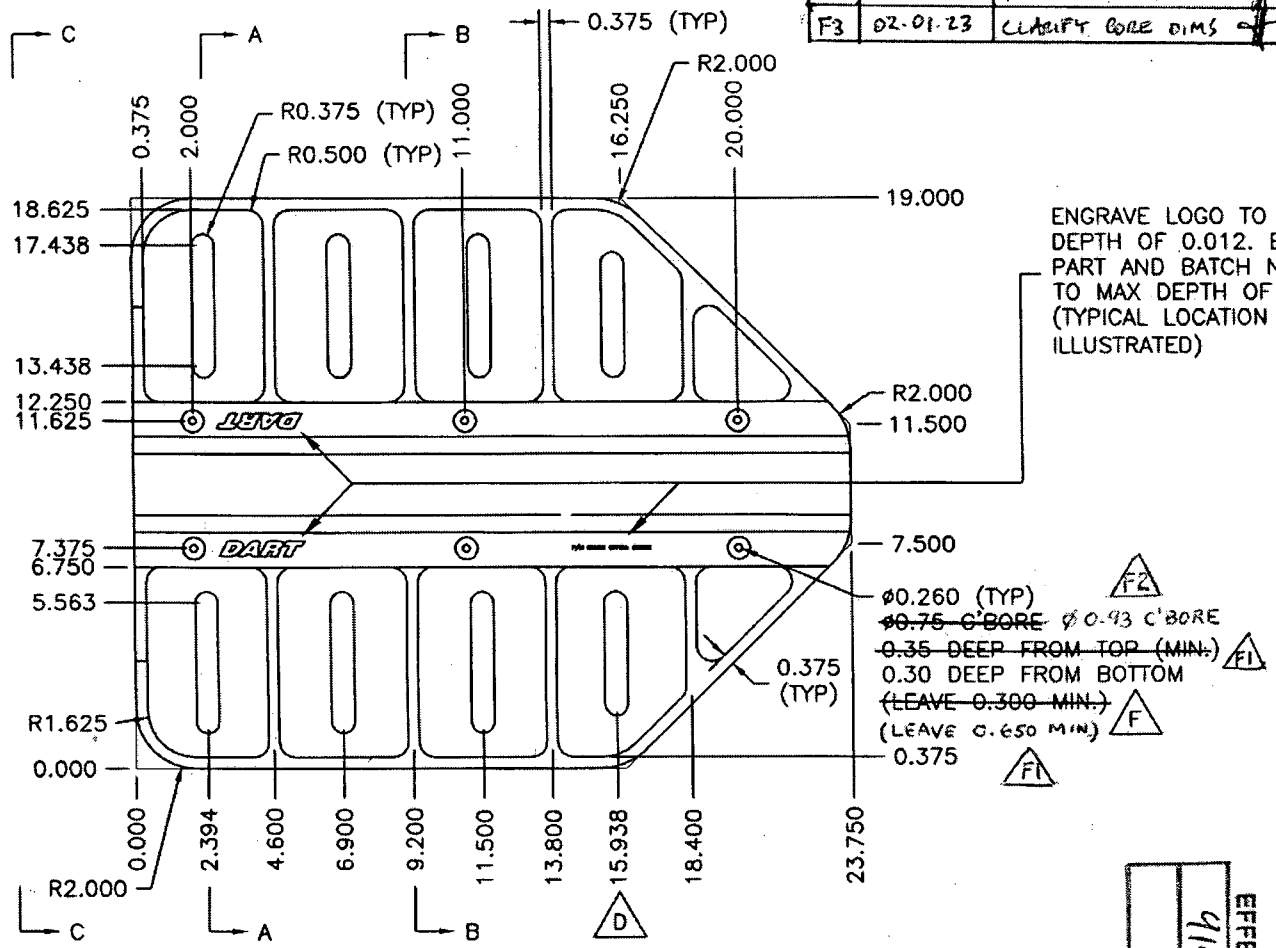

ENGRAVE LOGO TO MAX DEPTH OF 0.012. ENGRAVE PART AND BATCH NUMBERS TO MAX DEPTH OF 0.010. (TYPICAL LOCATION AS ILLUSTRATED)

FLAT PATTERN

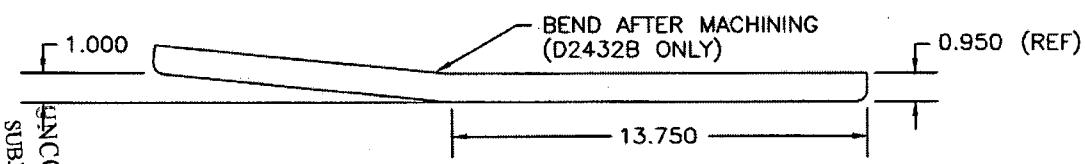

D2432F: FLAT BEARPAW
D2432B: BENT BEARPAW

F

MATERIAL: UHMW BLACK PER SPEC CONTROL DRAWING D2689
1.00 THICK (MACHINE TO 0.950)

EFFECTIVE DEOs: 9143

A	95.10.31	NEW ISSUE	
B	96.01.24	RE-DESIGN	
C	96.03.26	CHANGE BORE AND C'BORE DEPTH	
D	96.06.04	MOVE SLOT	
E	97.02.27	CHANGE C'BORE DEPTH, BORE RADIUS	
F	98.05.12	CHANGE C'BORE, ADD B AND F P/N	

DESIGN: KE
DRAWN BY: KE
CHECKED: MM
APPROVED:
DATE: 98.05.12

DART AEROSPACE LTD
HAWKESBURY, ONTARIO, CANADA

DRAWING NO. D2432
REV. F
TITLE: BEARPAW
SHEET 1 OF 2
SCALE 1:6

SHOP COPY
RETURN TO
ENGINEERING
UNCONTROLLED COPY
SUBJECT TO AMENDMENT
WITHOUT NOTICE

WORK ORDER NO. 283470

DESIGN	DRAWN BY	DART AEROSPACE LTD HAWKESBURY, ONTARIO, CANADA	
KE	KE		
CHECKED	APPROVED	DRAWING NO.	REV. F
		D2432	SHEET 2 OF 2
DATE		TITLE	SCALE
98.05.12		BEARPAW	1:4

DART

COPY ISSUED

RELEASED
98.06.17 KE

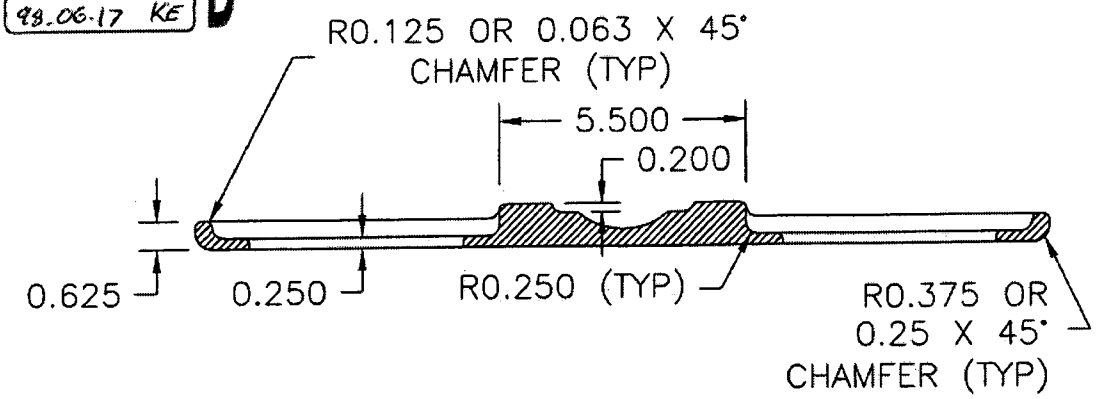

SECTION A–A

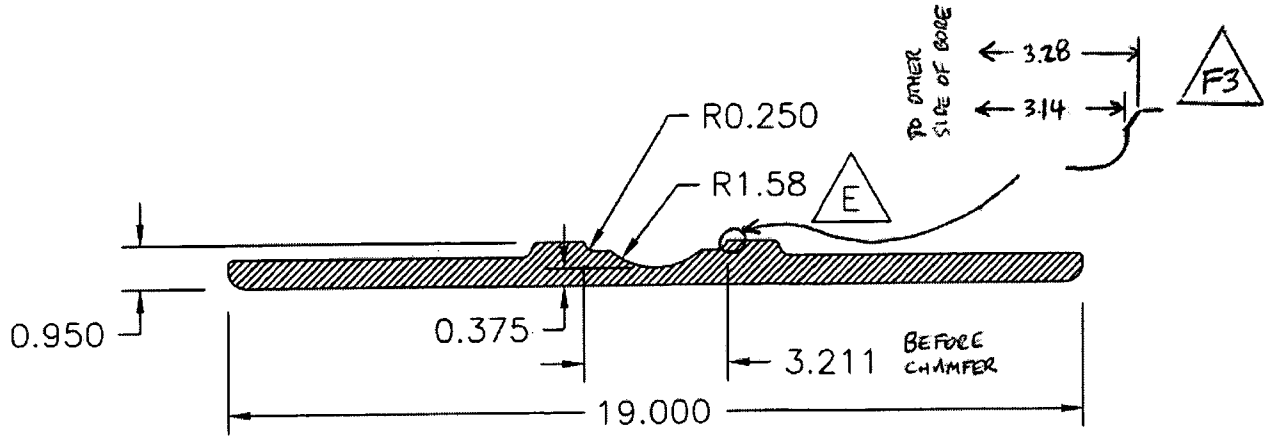

SECTION B–B

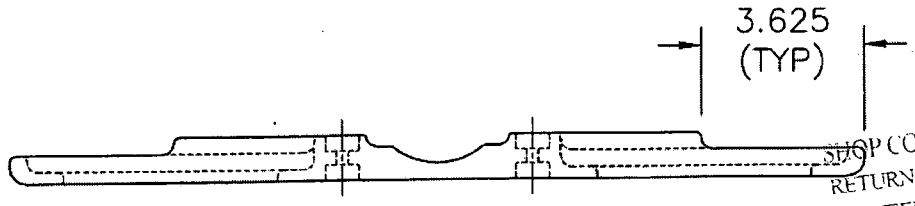

SECTION C–C

SHOP COPY
RETURN TO
ENGINEERING
UNCONTROLLED COPY
SUBJECT TO AMENDMENT
WITHOUT NOTICE
WORK ORDER
NO. 28340

39

Date: Friday, 8/25/2006 11:20:45 AM
User: Kim Johnston

Process Sheet

Customer	: CU-DAR001 Dart Helicopters Services	**Drawing Name**	: BEARPAW KIT (19"X24")
Job Number	: 28340		
Estimate Number	: 10323		
P.O. Number	:	**Part Number**	: K10008
This Issue	: 8/25/2006 **S.O. No.** :	**Drawing Number**	: D2432 REV F3
Prsht Rev.	: NC	**Project Number**	: N/A
First Issue	: / / **Type** : MACHINED PARTS	**Drawing Revision**	: F3
Previous Run	: 27871	**Material**	:
Written By	:	**Due Date**	: 9/25/2006 **Qty:** 20 **Um:** Each
Checked & Approved By	: 06-08.25		
Comment	: Est Rev:J 04.02.17 Blank size changed KJ/JLM		

Additional Product

Job Number:

Seq. #:	Machine Or Operation:	Description :
1.0	DC	DOCUMENT CONTROL

Comment: DOCUMENT CONTROL
Photocopy bluefile:
K10008 ✓
D206-559-013 ✓
D350-578-011 ✓
D427-659-011
D315-670-011
and create labels per PPP K10008
CHG006(Bag Bluefiles separately)

REFERENCE ONLY

06.09.08

2.0	MUHMWB10	UHMW 1" Black

Comment: Qty.: 6.8250 sf(s)/Unit Total : 136.5000 sf(s)
blank: 19.500" x 24.00" x 1.00" thick (+0.030/-0.000) per DSK086-5
Material: Black UHMW 1"
(MUHMWB10)
Batch:_____

3.0	HAAS1	HAAS CNC VERTICAL MACHINING #1

Comment: HAAS CNC VERTICAL MACHINING #1
Note:(2) bearpaws for (1) Kit

1-Inspect material for defects or damage prior to machining

2-Machine as per Folio and Dwg D2432 Identify as D2432F

3-Deburr

Form: rprocess